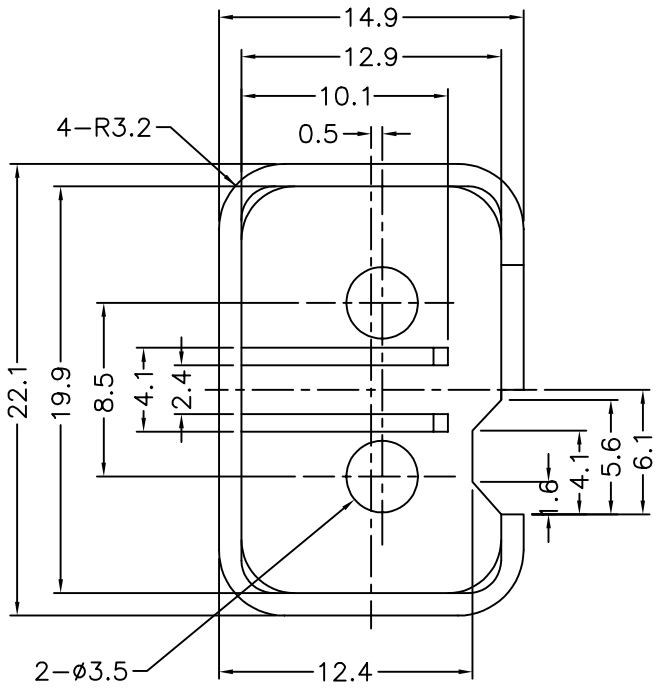

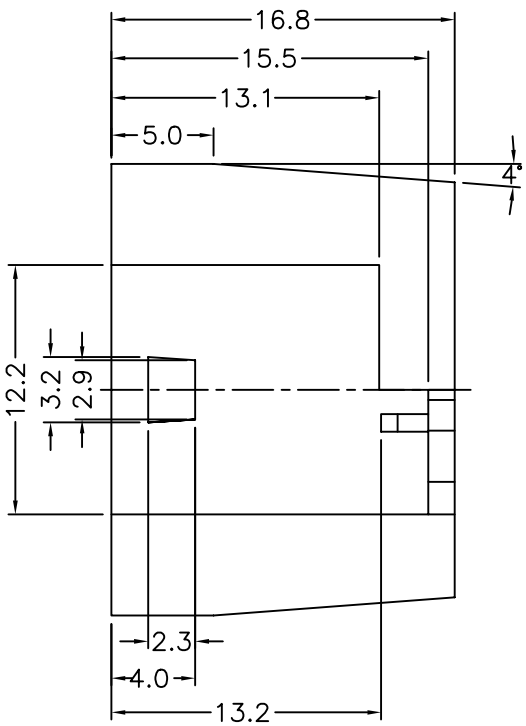

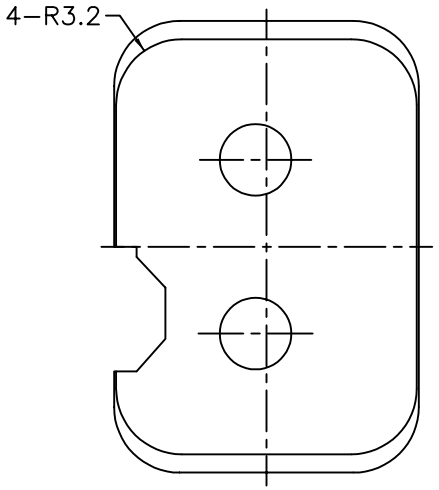

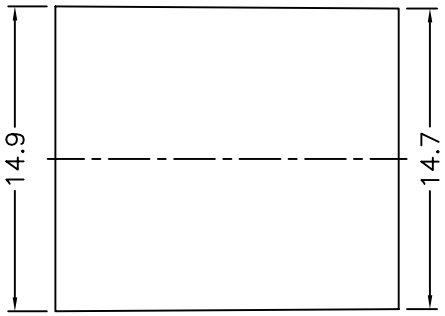

ISSUE NO.	V1.0	V1.1				
DATE	20-5-99	21-4-2000				
DRAWN	萧 冰	萧 冰				
CHECKED	刘建强	刘建强				
APPROVED	陈光照	陈光照				

E-Mail: Sales@peterparts.com | Phone: 585-265-2000 | Fax: 585-265-2542

UNIT	MM	SCALE	DON'T SCALE	PART NO.	AC−207−01 COVER			
				MATERIAL	ABS V0			
TOLERANCE ±0.15				ACAD FILE	AC−207−01 COVER	SH OF	SIZE A4	DRAWING NO.