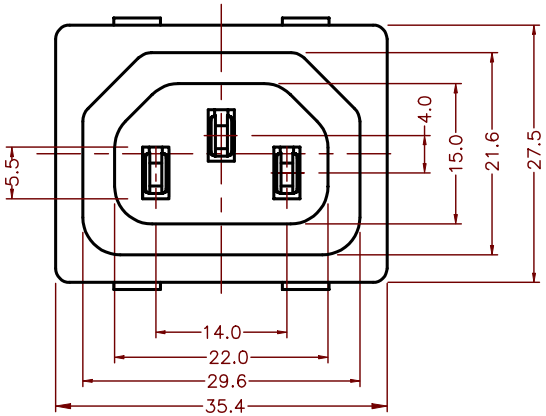

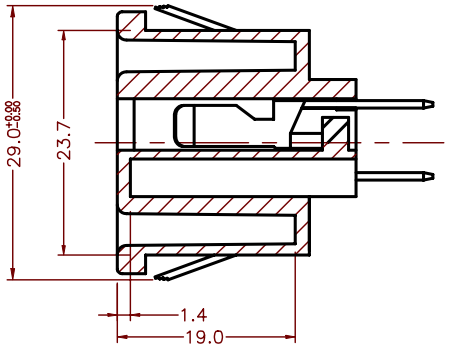

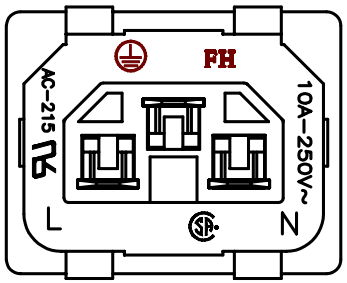

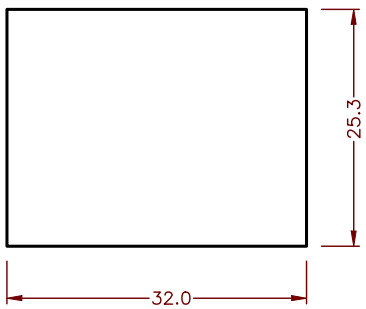

MOUNTING HOLE DIMENSION

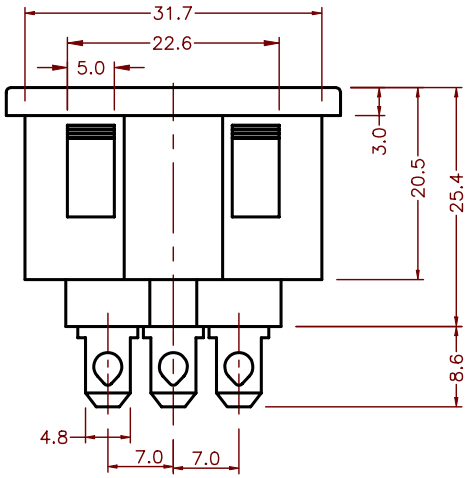

CERTIFICATE NO: E140983

CERTIFICATE NO: 212063-2500020463

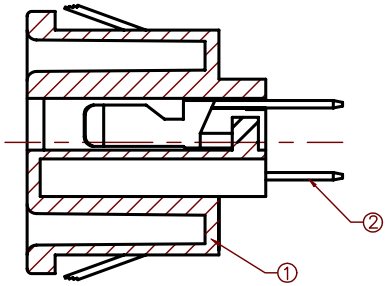

DO NOT SCALE DRAWING

E-Mail: Sales@peterparts.com | Phone: 585-265-2000 | Fax: 585-265-2542

ISSUE NO.	V1.0	V1.1	V1.2	
DRAWN	刘建强	刘建强	刘建强	
DATE	26-6-2000	8-9-2001	21-12-2001	
CHECKED	萧 冰	萧 冰		
APPROVED	陈光照	陈光照		
REMARK:				

NOTES:

1. GENERAL TOLERANCE:
   X.X ±0.3 X.XX ±0.20
   X.XXX ±0.10
   UNLESS STATED OTHERWISE
2. ANGLE TOLERANCE:
   X°. ±5°
   X.X° ±3.0°
   X.XX° ±1.0°
   UNLESS STATED OTHERWISE
3. DIMENSIONS ARE IN MM
   UNLESS STATED OHTERWISE

MECHANICAL STRUCTURE		
INSERTION FORCE	6.0 Kg MAX	
EXTRACTION FORCE	0.5~5.5 Kg	
ACAD FILE:		SIZE A4

MODEL NO.	AC 215
MATERIAL	PART NO.
① PA	⑦
② BRONZE(BRIGHT-Sn PLATED)	⑧
③	⑨
④	⑩
⑤	⑪
⑥	⑫