E-Mail: Sales@peterparts.com | Phone: 585-265-2000 | Fax: 585-265-2542
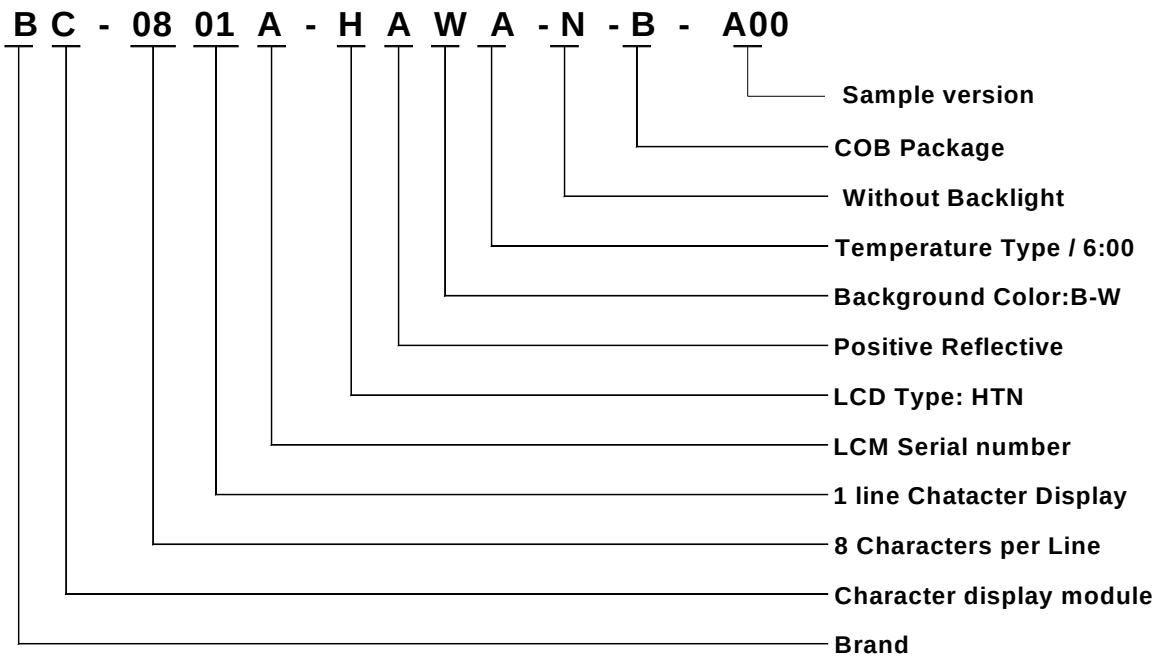
PART NUMBER LEGEND - CHARACTER LCD's